● การประยุกต์ใช้งาน

- *Extrusion lines*
- *Injection presses for plastics*
- *Heat punches*
- *Presses for rubber*
- *Packaging machines*
- *Packing machines*
- *Polymerization and synthetic fiber plants*
- *Food processing pants*
- *Die-casting plants*
- *Cooling plants*
- *Climatic cells and test benches*
- *Dryers for ceramics and construction parts*
- *Ovens*
- *Painting plants*

● คุณสมบัติ

- *Universal input configurable from faceplate*
- *Accuracy better than 0.2% f.s. under nominal conditions*
- *Control output: relay, logic, Triac or continuous*
- *Hot/cold function with selection of cooling fluid*
- *3 alarms with completely configurable function*
- *Analog retransmission output*
- *Up to 2 isolated digital inputs with configurable function*
- *Isolated digital input with configurable function*
- *Auxiliary input for CT (TA) (50mAac)*
- *Heater break or probe short-circuit alarm*
- *Self-tuning, Auto-tuning, Soft-start, bumpless Man/Auto function*
- *Double set, set ramp, timed output function*
- *Optically isolated RS485 serial line. Protocol: GEFRAN MODBUS RTU*
- *Self-diagnosis*
- *Rapid configuration from PC with Winstrum packet*

● การทำงาน

1200-Series เป็น Controller ขนาด 48 X 96 mm. และ 1300-Series เป็น Controller ขนาด 96 X 96 mm. ที่สามารถรับเป็น Universal Input ได้ทั้ง Themocouple , PT100 , NTC/PTC , Linear input สามารถรับ CT เพื่อเช็ค Heater ขาดได้, สามารถเลือก Setpoint , Manual-Automatic mode , reset alarm memory หรือ Hold Function ได้ด้วย Digital Input

Output มีให้เลือกทั้ง Analog Voltage and Current output ใช้งานง่ายเนื่องจากมี Parameter setting ไม่มาก สามารถติดต่อคอมพิวเตอร์ได้ทั้ง Current loop หรือ RS-485 Modbus RTU Protocol, Speed 19200 baudrate.

● ข้อมูลทางเทคนิค

INPUTS
Accuracy 0,2% f.s. ±1digit.
Acquisition of the input signal 120msec.

TC - Thermocouples

J	0...1000°C / 32...1832°F
K	0...1300°C / 32...2372°F
R	0...1750°C / 32...3182°F
S	0...1750°C / 32...3182°F
T	-200...400°C / -328...752°F
B	44...1800°C / 111...3272°F
E	-100...750°C / -148...1382°F
N	0...1300°C / 32...2372°F

custom -1999...9999
Using the custom solution, tables are available for the following thermocouples:

L-GOST	0...600°C / 32...1112°F
U	-200...400°C / -328...752°F
G	0...2300°C / 32...4172°F
D	0...2300°C / 32...4172°F
C	0...2300°C / 32...4172°F
(NI-Ni18Mo)	0...1100°C / 32...2012°F

RTD 3-wires
PT100 -200...850°C / -328...1562°F
JPT100 -200...600°C / -328...1112°F

PTC
990Ω, 25°C -55...120°C / -67...248°F
NTC
1KΩ, 25°C -10...70°C / 14...158°F

DC - Linear
With scale settable in limits:
-1999...9999
0...60mV / 12...60mV
0...10V / 2...10V
0...5V / 1...5V
0...1V / 0,2...1V
0...20mA / 4...20mA
Imput impedance:
Ri > 1MΩ per 60mV,1V
Ri > 10KΩ per 5V, 10V
Ri = 50Ω per 20mA
Custom linearisation with 32 segment.

Auxiliary input
(IN CT)
For current transformer
50mAac, 50/60Hz, Ri=10Ω

Digital input
(IN1/IN2)
PNP: Ri = 4,7KΩ (24V, 5mA) insulation 1500V

NPN: voltage-free contact.
Function configurable among man/auto selection, local/remote (setpoint from serial line, setpoint1/setpoint2);
Set/reset outputs, start/stop tuning functions, software off/on, reset alarm memory, hold.

OUTPUTS
4 configurable outputs:
• OUT1 relay (switching contact only with OUT2 relay)
• OUT2 available in relay, logic or triac
• OUT3 available in relay, logic, continuous or analog retransmission
• OUT4 relay or logic.

The outputs are freely assignable to control and alarm functions (in "OR" or "AND").
They can be slaved to a faceplate key or to the auxiliary digital input.

Relay
(order code R)
With rating: 5A/250Vac/30Vdc, cosφ=1

Logic
(order code D)
24Vdc, Rout=100Ω (10V/20mA)

Triac (order code T)
24...240Vac ± 10%, 50/60Hz, 1A max.
I^2t = 128A^2sec.
Leakage current 1.5mA max a 200Vac.

Continuous (order code C)
0...10V, 0/4...20mA, on 500Ω max
only for heat/cool control output.

● ข้อมูลทางเทคนิค [ต่อ]

Retransmission
(order code W)
0...10V, 0/4...20mA, on 500Ω resolution 12bit, useful for retransmission of the variable.

Serial line
Optoisolated 2/4 wires, RS422/485 (1200, 2400, 4800, 9600, 19200 baud) interface
Prot.: MODBUS RTU

Power Supply
Standard:
100...240Vac/dc ± 10% max 18VA
On request:
11...27Vac/dc ± 10% max 11VA
50/60Hz. Protection by internal fuse not serviceable by the user

Power SupplyTransmitter
24V ±10% not stabilized, 30mA
Short circuit protection

Ambient Condition

Working temperature range: 0...50°C
Storage temperature range: -20...70°C
Humidity: 20...85%Ur non condensing

Control
On/Off, P, PD, PID in both heating and cooling, with parameters settable from keyboard..
Cooling setpoint relative to heating setpoint.

- Manual reset -999...999 digits
- Reset power -100.0...100.0%
- Cycle time 0...200sec
- Soft-start 0.0...500.0 min

For each action:
- Proportional band 0.0...999.9% f.s.
- Integral time 0.0...99.99 min
- Derivative time 0.0...99.99 min
- Maximum power limit 0.0...100.0%

Alarms
- 3 alarm limits settable in absolute, deviation, symmetrical deviation value compared to set-point with direct or reverse function.
- Alarm limit settable along entire selected scale.
- Alarm masking with exclusion at power-up, with memory, with trip delay.
- LBA alarm for adjustment control
- Trip hysteresis settable for each alarm
- Alarm assigned to ammeter input with different function modes.

Weight
320g (1200)
400g (1300)

● หน้าจอแสดงผล

A - PV Display: process variable, hight 10mm (1200), 20mm (1300) green
B - SV Display: setpoint value, hight 10mm (1200), 13mm (1300) green
C - "Function" key
D - "Raise" key
E - "Lower" key
F - "Automatic/Manual" selection
G - Function indication, red leds
H - Indication of active outputs, red leds

Faceplate protection IP65

1200

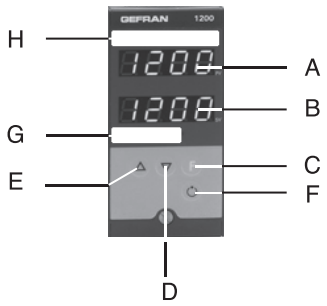

1300

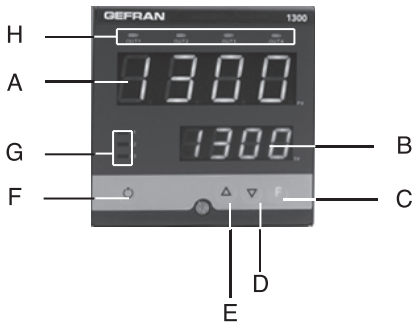

● ขนาดและมิติ

Dimensions: 48x96mm - 96x96mm (1/8DIN - 1/4DIN) depth 100mm

1200

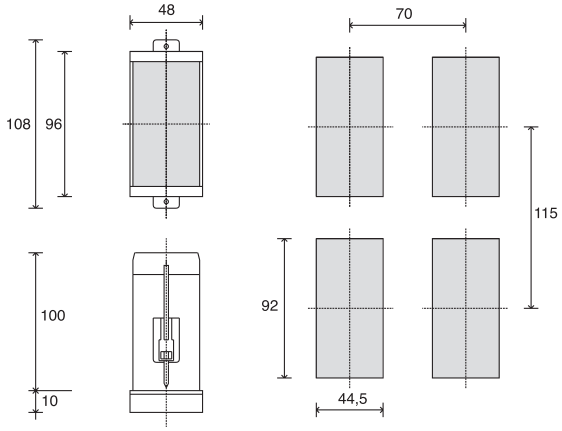
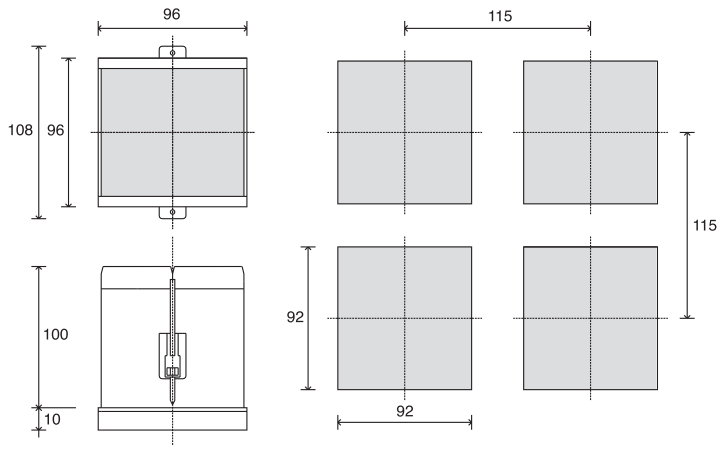
1300